Product Specifications

Post Office Box 97
Benton Harbor, Michigan
Ph: 269/926-6171
Fax: 269/925-8288

Model Number	MAX. PRESS. bar.	MAX. PRESS. PSI	MAX. SPEED	HP	kW	Net Wt. lbs.	Net Wt. kg
4AM-NRV-22A	7.0	100	3,000 RPM	1.7	1.25	7	3.2
4AM-NRV-22B	7.0	100	3,000 RPM	1.7	1.25	7	3.2
4AM-NRV-22F	7.0	100	3,000 RPM	1.7	1.25	7	3.2
4AM-NRV-22G	7.0	100	3,000 RPM	1.7	1.25	7	3.2
4AM-NRV-54A	7.0	100	3,000 RPM	1.7	1.25	7	3.2
* 4AM-NRV-132	7.0	100	3,000 RPM	1.7	1.25	7	3.2
4AM-NRV-22H	7.0	100	3,000 RPM	1.7	1.25	7	3.2
4AM-NRV-165	7.0	100	3,000 RPM	1.7	1.25	7	3.2

PART NUMBER: STD122
REVISION: L

TECHNICAL DATA SUBJECT TO CHANGE WITHOUT NOTICE.
DIMENSIONS SHOWN ARE FOR REFERENCE ONLY.
* DENOTES INACTIVE UNIT

SOUND LEVEL 87 dB(A) MAX.
NORMAL AMBIENT +1° C. - 120° C.
RELATIVE HUMIDITY 0% - 100%
ENVIRONMENT HAZARDOUS AMBIENT COMBUSTIBLE GAS AND DUST +1° TO +40°C

CONFORMS TO EUROPEAN STANDARD EN13463-1 NON-ELECTRICAL EQUIPMENT FOR EXPLOSIVE ATMOSPHERES GROUP 11 CAT 2 (GAS & DUST), PROTECTED BY CONSTRUCTION (SURFACE TEMP. RATED 135C).

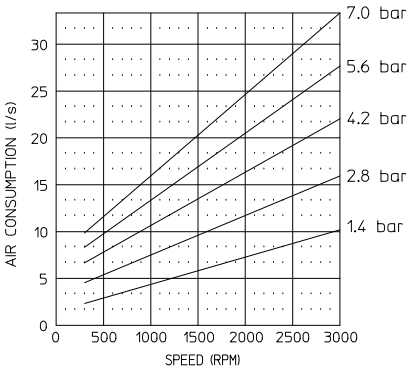

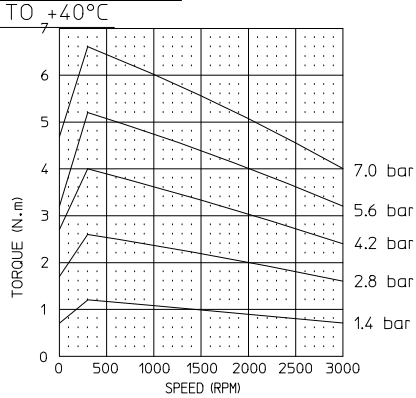

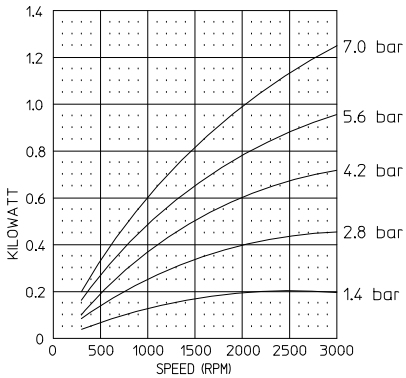

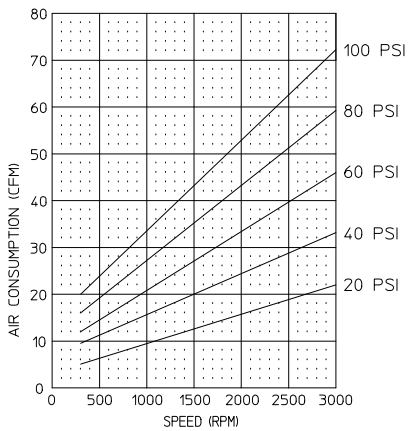

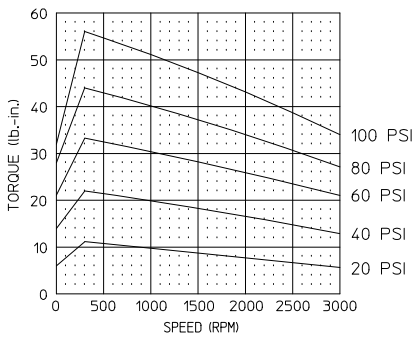

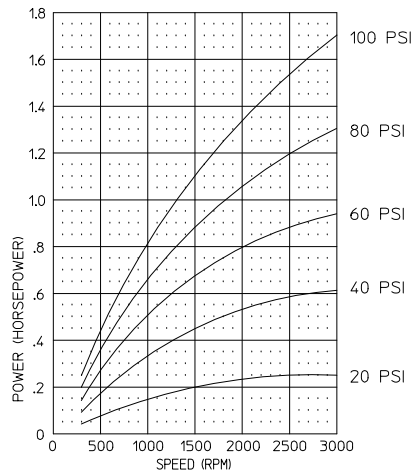

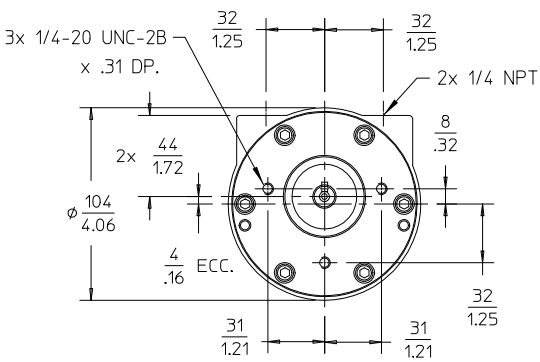

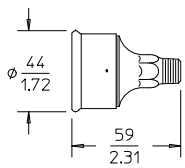
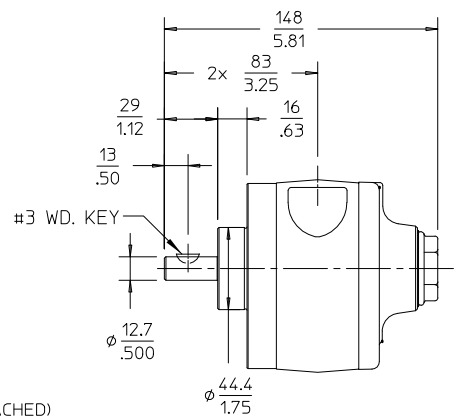
MUFFLER ASM. (SHIPPED UNATTACHED)
EXCEPT FOR 4AM-NRV-22A/4AM-NRV-22G/4AM-NRV-22H